目 录 CONTENTS

取料机链
Feed Taker Chains……1-3

斗式提升机链
Bucket Elevator Chains……4-11

鳞(裙)板机链
Apron Chains……12

FU 系列刮板链
FU Series of Scraper Chains……13

锻造叉型链
Forging Fork-Shape Chains……14

刮板链
Scraper Chains……15-16

模锻刮板链
Drop Forging Scraper Chains……17-19

模锻可拆链
Drop Forging Rivetless Chains……20

套筒链
Bushed Chains……21

套筒链附件
Attachments of Bushed Chains……22-23

弯板套筒链
Crank-Link Bushed Chains……24

取料机链
Feed Taker Chains

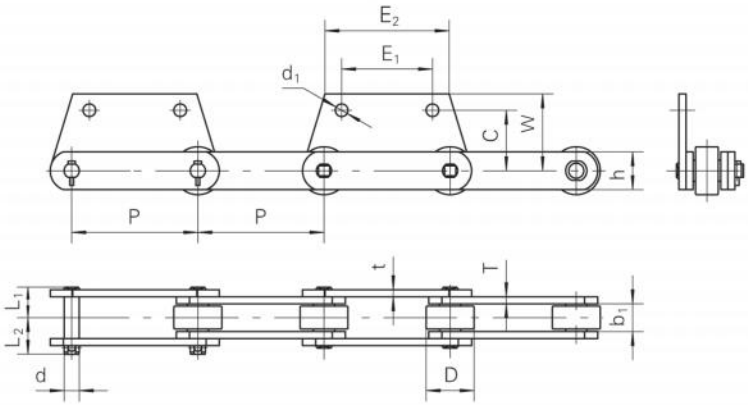

链 号	节 距	内节内宽	滚子外径	销 轴			链 板		最小抗拉强度	每米重量
Chain No.	Pitch	Width between inner Sidebars	Roller Diameter	Pin			Sidebar		Ultimate Tensile Strength	Weight per Meter
	P	b_1(min)	D(max)	d	L_1	L_2	h	t/T	Fu(min)	q
	mm	mm	mm	mm	mm	mm	mm	mm	kN	kg/m
SPN250-SH2	250	55	95	30	62	70	75	14	750	39.97
SPN250A-SH2	250	55	95	30	62	70	75	14	750	40.5
SPN250B-SH2	250	55	95	28	64.85	70.35	75	14	750	39.5
SPN315B-SH2	315	55	120	36	65	74	100	14	900	49.69
SPN315C-SH2	315	55	120	36	64.9	66.7	100	14	900	49.4
SPN315D-SH2	315	50	120	36	54.6	63.4	100	10	640	41.6
SPN315E-SH2	315	55	120	39	64.6	74.4	100	14	900	50.15
SPN315F-SH2	315	55	120	36	56.6	66.4	100	10	640	40.3
SPN315G-SH2	315	55	120	36	65	74	90	14	900	46.8
SPN315J-SH2	315	64	120	30	65.75	74.25	85	12/14	900	45.16
SPN315K-SH2	315	62.5	120	40	68.4	83.6	100	14	900	52.6
SPN315L-SH2	315	62.5	120	40	68.4	78.1	100	14	1078	52.1
SPN400-SH2	400	59.3	140	40	71.75	103.25	120	16	1500	64.53

链 号	E_1	E_2	C	W	d_1
Chain No.	mm	mm	mm	mm	mm
SPN250-SH2	180	246	120	152.5	25
SPN250A-SH2	180	246	120	152.5	25
SPN250B-SH2	180	253.6	110	140	25
SPN315B-SH2	200	315	110	140	25
SPN315C-SH2	200	315	110	140	25
SPN315D-SH2	200	305	130	160	25
SPN315E-SH2	200	330	110	140	25
SPN315F-SH2	200	305	130	160	25
SPN315G-SH2	200	315	110	140	25
SPN315J-SH2	200	315	130	159.5	25
SPN315K-SH2	200	315	110	150	25
SPN315L-SH2	200	315	110	140	25
SPN400-SH2	300	400	130	175	26

取料机链
Feed Taker Chains

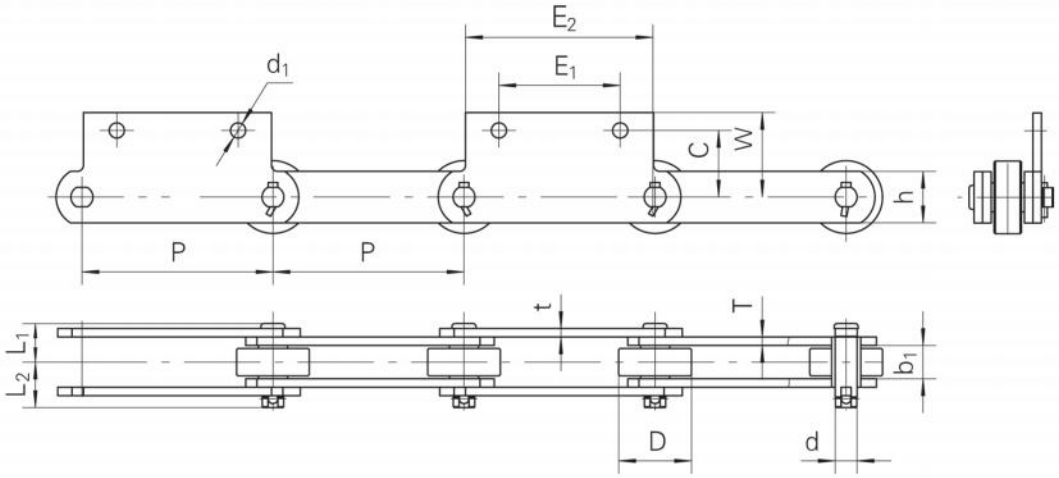

链 号	节 距	内节内宽	滚子外径	销 轴			链 板		最小抗拉强度	每米重量
Chain.No.	Pitch	Width between Inner Sidebar	Roller diameter	Pin			Sidebar		Ultimate Tensile Strength	Weight per Meter
	P	b_1(min)	D(max)	d	L_1	L_2	h	t/T	Fu(min)	q
	mm	mm	mm	mm	mm	mm	mm	mm	kN	kg/m
SPN315-SH2	315	55	120	36	65	74	90	14	900	45.15

链 号	E_1	E_2	C	W	d_1
Chain No.	mm	mm	mm	mm	mm
SPN315-SH2	200	315	110	139.5	25

取料机链
Feed Taker Chains

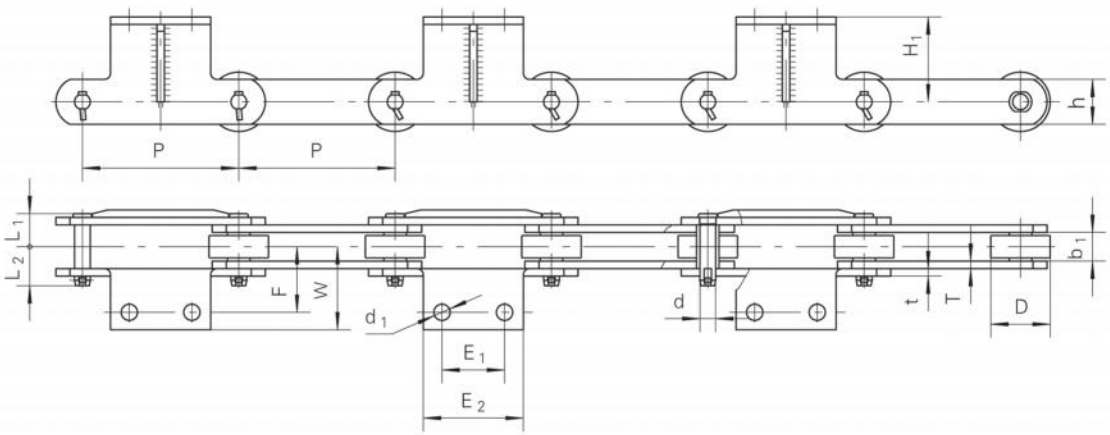

链 号	节 距	内节内宽	滚子外径	销 轴			链 板		最小抗拉强度	每米重量
Chain No.	Pitch	Width between inner Sidebars	Roller Diameter	Pin			Sidebar		Ultimate Tensile Strength	Weight per Meter
	P	b_1(min)	D(max)	d	L_1	L_2	h	t/T	Fu(min)	q
	mm	mm	mm	mm	mm	mm	mm	mm	kN	kg/m
SPN250A-SK2・2P	250	46	95	25	54.2	61.3	72	12	670	36.19
SPN250B-SK2・2P	250	42	80	24	52	60	60	12	520	26.79
SPN250C-SK2・2P	250	55.8	120	34	65	77.3	90	14	725	55.63
SPN250D-SK2・2P	250	50	90	30	59.35	67.95	75	14	750	37
SPN250F-SK2・2P	250	50	90	28	62.35	67.85	75	14	750	38
SPN315A-SK2・2P	315	50	120	36	58.7	67.8	80	12	610	42.8

链 号	E_1	E_2	F	W	d_1	H_1
Chain No.	mm	mm	mm	mm	mm	mm
SPN250A-SK2・2P	100	160	106	134.1	26	136
SPN250B-SK2・2P	100	152	83	112	21	150
SPN250C-SK2・2P	120	180	88.5	118.5	22	120
SPN250D-SK2・2P	100	150	98.5	127.5	26	131.5
SPN250F-SK2・2P	100	170	100	147	26	130
SPN315A-SK2・2P	130	190	89.5	125.5	21	140

斗式提升机链
Bucket Elevator Chains

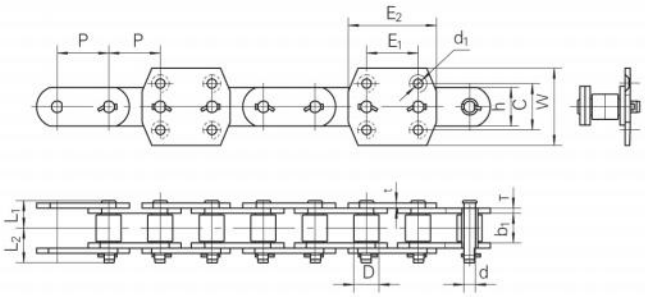

链号	E_1	E_2	C	W	d_1
Chain No.	mm	mm	mm	mm	mm
NSE150A	75	130	80	122	14
NSE100C	75	130	80	126	14
NSE200E	100	171	105	150	18
NSE300	100	171	90	150	18
NSE300A	100	180	105	150	18
NSE300B	100	180	105	150	18
NSE300E	100	180	105	150	18
NSE300G	100	180	105	150	18

链号	节距	内节内宽	滚子外径	销轴			链板		最小抗拉强度	每米重量
Chain No.	Pitch	Width between Inner sidebars	Roller Diameter	Pin			Sidebar		Ultimate Tensile Strength	Weight per Meter
	P	b_1(min)	D(max)	d	L_1	L_2	h	t/T	Fu(min)	q
	mm	mm	mm	mm	mm	mm	mm	mm	kN	kg/m
NSE150A	75	36.2	36	16	47.35	47.35	50.8	9.5	270	18.75
NSE100C	76.2	36.5	36	17	40.1	46.9	50	8	270	16
NSE200E	100	51.6	44.5	19.8	53	58	60	10	280	24.1
NSE300	100	57	48.5	22.23	54.4	62.4	75	10	540	30.1
NSE300A	100	57	48.5	22.23	54.4	62.4	75	10	540	30.34
NSE300B	100	57	47.5	22.23	54.4	62.4	75	10	540	30
NSE300E	100	57	48.5	22.23	54.4	62.4	75	10	540	30.49
NSE300G	100	57	48.5	22.23	54.4	62.4	75	10	540	30.14

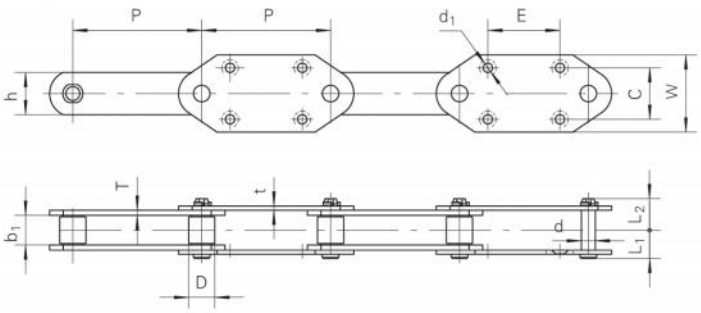

链号	C	W	E	d_1
Chain No.	mm	mm	mm	mm
NE150	80	125	100	18
NE150A	80	125	100	14
NE300	100	150	140	18
0712	100	150	140	18

链号	节距	内节内宽	滚子外径	销轴			链板		最小抗拉强度	每米重量
Chain No.	Pitch	Width between inner sidebars	Roller Diameter	Pin			Sidebar		Ultimate Tensile Strength	Weight Per Meter
	P	b_1(min)	D(max)	d	L_1	L_2	h	t/T	Fu(min)	q
	mm	mm	mm	mm	mm	mm	mm	mm	kN	kg/m
NE150	200	57	48.5	22.23	62.25	62.25	75	10	540	21.59
NE150A	200	57	48.5	22.23	60.2	66.8	65	12	315	24.4
NE300	250	76	90	35	89	89	100	16	1000	53.21
0712	250	57.4	50.8	27	56	60	82	8/10	700	20.96

斗式提升机链
Bucket Elevator Chains

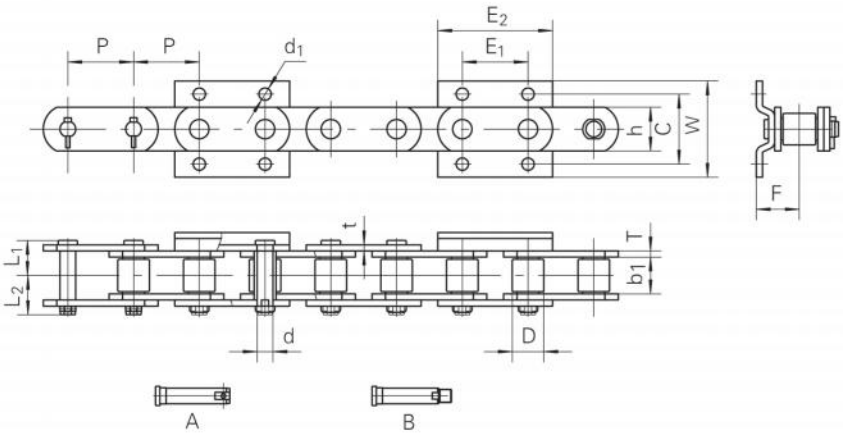

链号	节距	内节内宽	滚子外径	销轴			链板		最小抗拉强度	每米重量
Chain No.	Pitch	Width Between inner sidebars	Roller Diameter	Pin			Sidebar		Ultimate Tensile Strength	Weight per Meter
	P	b_1(min)	D(max)	d	L_1	L_2	h	t/T	Fu(min)	q
	mm	mm	mm	mm	mm	mm	mm	mm	kN	kg/m
M160*75TA	75	41.8	36	18	40.8	45.7	56	7	160	17.37
NSE100	75	43.6	39	20	44.1	51.2	56	8	375	20.27
NSE100A	75	35	32	16	35.6	45.4	50.8	6.4	270	13.1
NSE100B	76.2	37	35	16	40.5	47	45	8	270	15.1
NSE150	75	42.5	38	18	43.3	56.3	56	8	375	19.98
NSE150B	75	42.5	36	18	43.3	56.3	56	8	375	19.48
NSE300C	100	60	54	30	61.5	83.5	78	12	790	41.3
NSE300D	100	60	56	30	61.5	83.5	86	12	840	44.39
NSE300F	100	60	56	30	59.5	81.5	78	10/12	790	39.3

链号	E_1	E_2	C	W	d_1	F	连接销轴
Chain No.	mm	mm	mm	mm	mm	mm	Conn Pin Type
M160*75TA	75	143	80	110	14	50	A
NSE100	75	132	90	124	14	50	A
NSE100A	75	125	86	115	13.6	40.7	B
NSE100B	75	125	80	115	14	46.5	A
NSE150	75	132	90	124	14	49.6	B
NSE150B	85	132	90	124	14	49.6	B
NSE300C	100	180	110	155	18	65.5	B
NSE300D	100	180	120	165	18	65.5	B
NSE300F	100	180	115	155	18	68.1	B

斗式提升机链
Bucket Elevator Chains

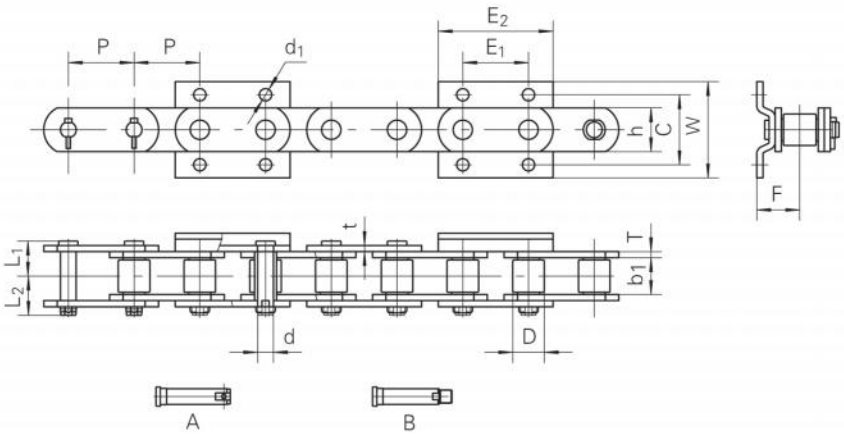

链号	节距	内节内宽	滚子外径	销轴			链板		最小抗拉强度	每米重量
Chain No.	Pitch	Width between inner sidebars	Roller Diameter	Pin			Sidebar		Ultimate Tensile Strength	Weight Per Meter
	P	b_1(min)	D(max)	d	L_1	L_2	h	t/T	Fu(min)	q
	mm	mm	mm	mm	mm	mm	mm	mm	kN	kg/m
NSE200	100	50	46	22	51.9	59.6	60	10	450	24.3
NSE200A	100	50	46	22	51.9	60.9	60	10	450	24.3
NSE200B	100	43	41	21	44.4	52.1	60	8	224	19.4
NSE200D	100	50	46	22	52.05	59.45	60	10	450	24.3
NSE400	100	53.7	50	24	53.9	66.6	68	10	630	28.7
NSE400A	100	53.7	50	26	57.9	70.1	68	12	630	34.13
NSE400B	100	60	55	28	61.4	83.6	78	12	790	41.68
NSE400C	100	53.7	48	24	53.9	66.6	68	10	630	28.02
NSE400D	100	56.7	50	26	59.8	67.2	68	12	630	34.9
NSE400E	100	53.7	48	24	53.9	66.6	68	10	630	27.8
NSE400F	100	60	56	28	61.4	83.6	78	12	790	42.1
NSE400G	100	53.7	50	26	57.9	70.1	68	12	630	34.13
NSE400H	100	56.7	50	26	59.8	67.2	68	12	630	34.9

链号	E_1	E_2	C	W	d_1	F	连接销轴
Chain No.	mm	mm	mm	mm	mm	mm	Conn. Pin Type
NSE200	100	148	100	156	18	59	A
NSE200A	100	148	100	156	18	59	B
NSE200B	100	168	100	148	18	47	A
NSE200D	100	157	100	140	18	59	A
NSE400	100	157	100	137	18	67	B
NSE400A	100	180	115	155	18	67	B
NSE400B	100	180	115	153	18	71.4	B
NSE400C	100	157	100	137	18	67	B
NSE400D	100	180	105	155	18	68.5	A
NSE400E	100	157	100	137	18	60	B
NSE400F	100	180	115	153	18	70	B
NSE400G	100	180	105	155	18	67	B
NSE400H	100	180	115	155	18	67	A

斗式提升机链
Bucket Elevator Chains

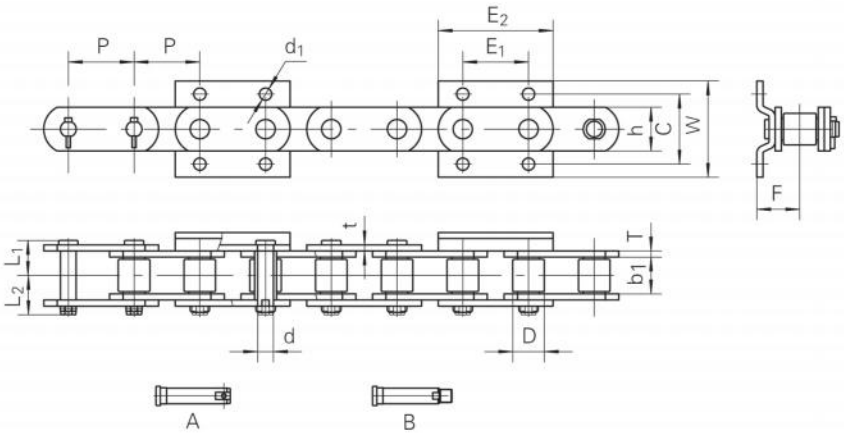

链号	节距	内节内宽	滚子外径	销轴			链板		最小抗拉强度	每米重量
Chain No.	Pitch	Width Between inner sidebars	Roller Diameter	Pin			Sidebar		Ultimate Tensile Strength	Weight per Meter
	P	b_1(min)	D(max)	d	L_1	L_2	h	t/T	Fu(min)	q
	mm	mm	mm	mm	mm	mm	mm	mm	kN	kg/m
M224*100TD	100	47	42	21	46.3	53.7	60	8	224	20
M224A*100TD	100	43	42	21	44.4	55.4	60	8	224	19.1
SSN100-H4	100	57	50.8	24	55.4	61.6	63.5	9.5	539	27.8
SSN100A-H4	100	57	50.8	24	55.4	61.6	63.5	9.5	528	27.5
SSN100B-H4	100	51	40.1	19.05	51.5	57.5	50.8	9.5	387	18.78
SSN125-H4	125	57	50.8	24	55.4	61.6	63.5	9.5	539	24.73
SSN125A-H4	125	57	50.8	24	55.4	61.6	63.5	9.5	539	24.04
SSN125B-H4	125	57	50.8	24	55.4	61.6	63.5	9.5	539	23.97
SSN125C-H4	125	51	40.1	19.05	51.5	57.5	50.8	9.5	387	17.8
GX50125	125	70	62	33	69.2	79.3	80/90	12.7	980	46.1
GX60150	150	83	72	37	75.8	85.9	100/110	12.7	1274	57.74

链号	E_1	E_2	C	W	d_1	F	连接销轴
Chain No.	mm	mm	mm	mm	mm	mm	Conn. Pin Type
M224*100TD	100	168	100	148	18	55	A
M224A*100TD	100	168	100	148	14	47	B
SSN100-H4	100	168	100	160	18	62	A
SSN100A-H4	100	168	100	160	16	64.5	A
SSN100B-H4	100	154	100	146	16	58	A
SSN125-H4	125	193	110	172	22	62	A
SSN125A-H4	125	193	110	144	18	63.5	A
SSN125B-H4	125	193	110	144	18	63.5	A
SSN125C-H4	125	193	110	146	18	58	A
GX50125	125	210	110	172	22	78.5	A
GX60150	150	260	140	184	22	85	A

斗式提升机链
Bucket Elevator Chains

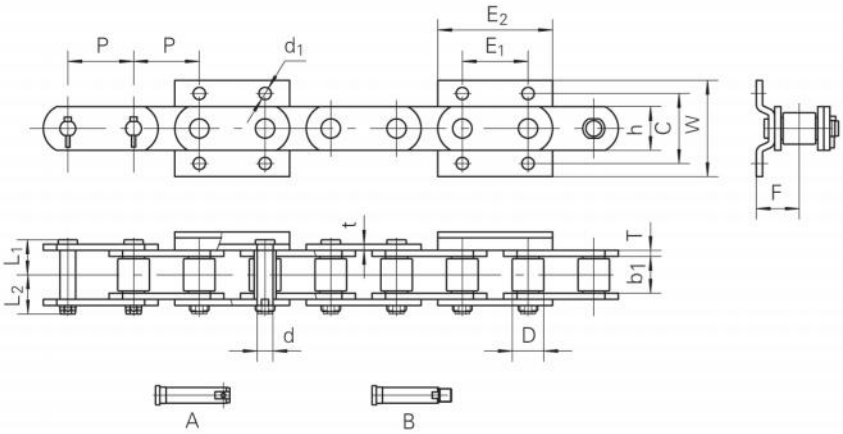

链号	节距	内节内宽	滚子外径	销轴			链板		最小抗拉强度	每米重量
Chain No.	Pitch	Width between inner sidebars	Roller Diameter	Pin			Sidebar		Ultimate Tensile Strength	Weight Per Meter
	P	b_1(min)	D(max)	d	L_1	L_2	h	t/T	Fu(min)	q
	mm	mm	mm	mm	mm	mm	mm	mm	kN	kg/m
NSE450	125	64	56	28	63.4	85.6	78	12	790	37.91
NSE450A	125	64	56	28	63.4	85.6	78	12	790	37.91
NSE450B	125	63.8	60	28	69	88	80	14	790	45
NSE450C	125	63.8	60	30	69	88	80	14	790	44.5
NSE500	125	70	65	33	72.3	81.7	90	14	980	51.56
NSE500A	125	80	70	38	77	96	110	14	1100	67.11
NSE500B	125	80	70	38	77	96	110	14	1100	67.5
NSE500C	125	70	65	33	72.3	81.7	90	14	980	51.2
NSE500D	125	70	63.5	33	72.3	81.7	90	14	980	50.21
NSE500E	125	70	64	33	72.15	96.85	90	14	980	50.43

链号	E_1	E_2	C	W	d_1	F	连接销轴
Chain No.	mm	mm	mm	mm	mm	mm	Conn. Pin Type
NSE450	125	210	110	160	18	72	B
NSE450A	125	210	115	160	18	72	B
NSE450B	125	210	120	172	18	75	B
NSE450C	125	210	120	160	18	75	B
NSE500	125	210	125	172	18	78	A
NSE500A	125	226	136	176	18	83	B
NSE500B	125	226	136	176	18	83	B
NSE500C	125	210	125	172	18	78	B
NSE500D	125	210	125	172	18	78	B
NSE500E	125	210	125	172	18	78	B

斗式提升机链
Bucket Elevator Chains

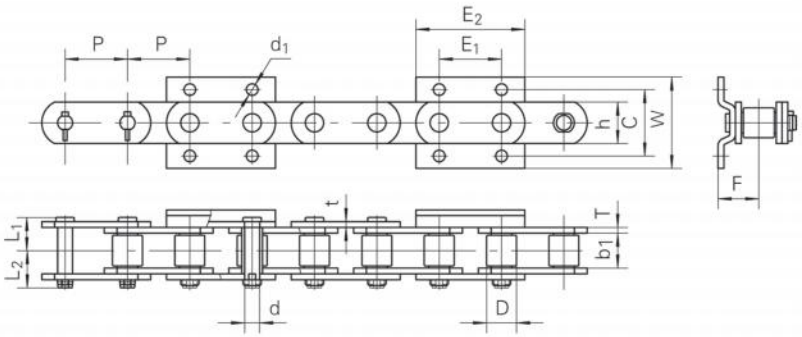

链号	节距	内节内宽	滚子外径	销轴			链板		最小抗拉强度	每米重量
Chain No.	Pitch	Width between inner sidebars	Roller Diameter	Pin			Sidebar		Ultimate Tensile Strength	Weight Per Meter
	P	b_1(min)	D(max)	d	L_1	L_2	h	t/T	Fu(min)	q
	mm	mm	mm	mm	mm	mm	mm	mm	kN	kg/m
NSE1000	150	94.5	82	48	93.25	104.75	137	16/18	2000	99.9
NSE1000C	150	94.5	82	48	93.25	104.75	137	16/18	2000	99.3
NSE1000F	150	94.5	80.2	48	93.25	104.75	137	16/18	2000	97.3

链号	E_1	E_2	C	W	d_1	F
Chain No.	mm	mm	mm	mm	mm	mm
NSE1000	190	280	190	242	22	100
NSE1000C	190	280	190	242	22	100
NSE1000F	190	280	190	242	22	100

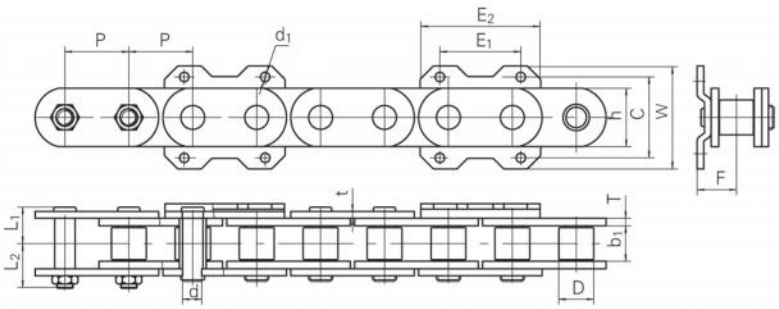

链号	节距	内节内宽	滚子外径	销轴			链板		最小抗拉强度	每米重量
Chain No.	Pitch	Width between inner sidebars	Roller Diameter	Pin			Sidebar		Ultimate Tensile Strength	Weight Per Meter
	P	b_1(min)	D(max)	d	L_1	L_2	h	t/T	Fu(min)	q
	mm	mm	mm	mm	mm	mm	mm	mm	kN	kg/m
NSE1000A	150	88	82	48	90	101.5	144	16/18	2000	97.6
NSE1000D	150	94.5	82	48	93.25	104.75	144	16/18	2000	99.34
NSE1000E	150	94.5	82	48	93.25	104.75	137	16/18	2000	97.9

链号	E_1	E_2	C	W	d_1	F
Chain No.	mm	mm	mm	mm	mm	mm
NSE1000A	190	283	190	242	22	97
NSE1000D	190	283	190	242	22	100
NSE1000E	190	283	190	242	22	100

斗式提升机链
Bucket Elevator Chains

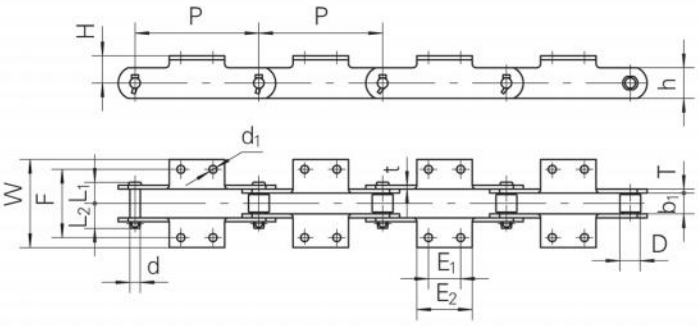

链号	节距	内节内宽	滚子外径	销轴			链板		最小抗拉强度	每米重量
Chain No.	Pitch	Width between inner sidebars	Roller Diameter	Pin			Sidebar		Ultimate Tensile Strength	Weight per Meter
	P	b_1(min)	D(max)	d	L_1	L_2	h	t/T	Fu(min)	q
	mm	mm	mm	mm	mm	mm	mm	mm	kN	kg/m
M224T-S-250-BK2	250	43	42	21	44.4	50.8	60	8	224	15.35
M315T-S-315-BK2	315	48	50	25	51.1	58.9	70	10	315	22.5

链号	E_1	E_2	F	W	d_1	H
Chain No.	mm	mm	mm	mm	mm	mm
M224T-S-250-BK2	65	112	140	180	16	55
M315T-S-315-BK2	100	150	160	216	18	65

中央链
Central Chain

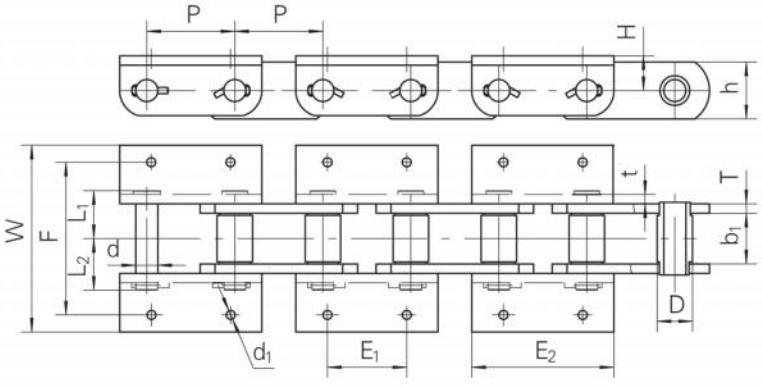

链号	节距	内节内宽	套筒外径	销轴			链板		最小抗拉强度	每米重量
Chain No.	Pitch	Width between inner sidebars	Roller Diameter	Pin			Sidebar		Ultimate Tensile Strength	Weight per Meter
	P	b_1(min)	D(max)	d	L_1	L_2	h	t/T	Fu(min)	q
	mm	mm	mm	mm	mm	mm	mm	mm	kN	kg/m
HBM600	177.8	95.5	71.5	44.54	98	112	115	19.05	1500	97.6

链号	E_1	E_2	F	W	d_1	H
Chain No.	mm	mm	mm	mm	mm	mm
HBM600	160	287	315	384	18	70.25

斗式提升机链
Bucket Elevator Chains

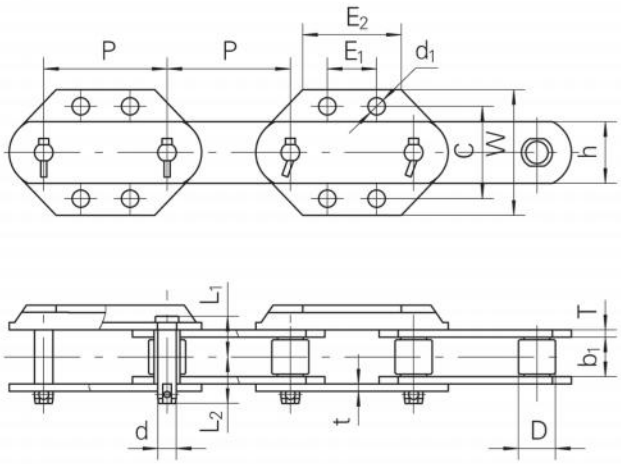

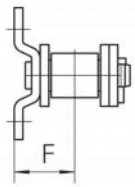

链号	节距	内节内宽	滚子外径	销轴			链板		最小抗拉强度	每米重量
Chain No.	Pitch	Width Between inner sidebars	Roller Diameter	Pin			Sidebar		Ultimate Tensile Strength	Weight per Meter
	P	b_1(min)	D(max)	d	L_1	L_2	h	t/T	Fu(min)	q
	mm	mm	mm	mm	mm	mm	mm	mm	kN	kg/m
M112*100TA	100	32	30	15	34	37	40	6	112	5.79
M112*150TA	150	32	30	15	34	37	40	6	112	7.39
M112*150TB	150	30	29	15	32.8	36.3	40	6	200	7.57
M112*150TC	150	30	29	15	34.9	38.1	40	8	226	8.32
M112*150TD	150	35	32	15	36.1	45	46	6.4	226	9.51
SSN150A	150	42.5	38	18	43.3	56.3	56	8	375	14.43
SSN150B	150	42.5	41	18	43.3	56.3	56	8	375	14.85
SSN150-H4	150	54.5	50	25	54.6	64.4	72	9.8	460	24.43

链号	E_1	E_2	C	W	d_1	F
Chain No.	mm	mm	mm	mm	mm	mm
M112*100TA	40	80	75	102	14	40
M112*150TA	75	100	75	102	14	40
M112*150TB	75	100	80	115	14	39
M112*150TC	75	100	80	115	14	38.5
M112*150TD	75	100	80	115	14	42
SSN150A	85	102	90	126	16	49.6
SSN150B	75	102	90	126	14	47.5
SSN150-H4	75	116	100	141	18	63.6

鳞（裙）板机链
Apron Chains

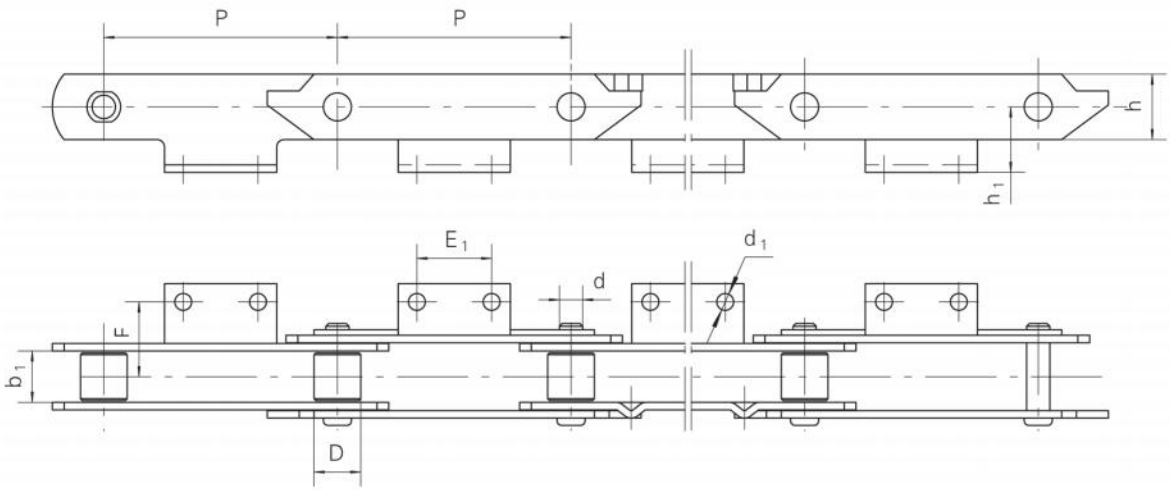

链号	节距	内节内宽	滚子外径	销轴	链板	最小抗拉强度
Chain No.	Pitch	Width between inner Sidebars	Roller Diameter	Pin	Sidebar	Ultimate Tensile Strength
	P	b_1 (min)	D (max)	d	h	Fu(min)
	mm	mm	mm	mm	mm	kN
STN250–K_2	250	45	40	26	65	350
STN250–K_2A_1	250	60	40	26	80	560
STN250–K_2A_2	250	62	60	30	80	600
STN250–K_2A_3	250	60	40	26	80	560
STN250–K_2A_4	250	60	44.3	29.7	90	600
STN250–K_2A_6	250	45	40	26	70	350
STN315–K_2	315	65	44	30	90	1500
STN250	250	55	50	25	70	350
STN250A	250	60	54	36	90	600

链号	h_1	F	E_1	d_1
Chain No.	mm	mm	mm	mm
STN250–K_2	59.5	70	80	14
STN250–K_2A_1	70	85	80	14
STN250–K_2A_2	72	90	85	16
STN250–K_2A_3	70	85	80	14
STN250–K_2A_4	70	85	80	14
STN250–K_2A_6	60	70	80	14
STN315–K_2	60	267/2	55	方 Square Hole 12.7
STN250	70	80	80	18
STN250A	70	85	80	14

FU系列刮板链
FU Series of Scraper Chains

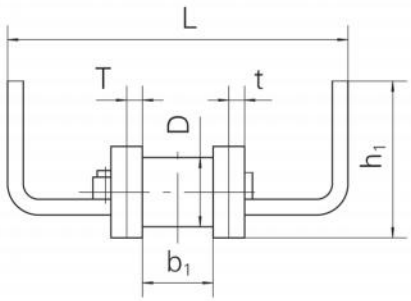

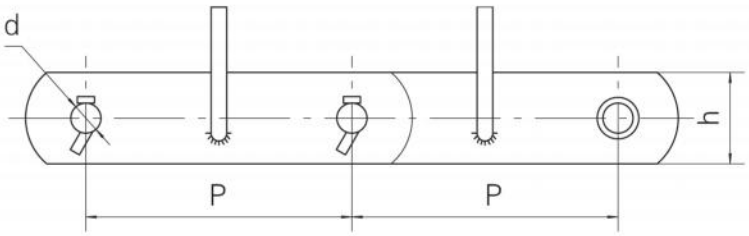

链号	节距	内节内宽	滚子外径	销轴	链板		挂钩高度	挂钩总宽	最小抗拉强度
Chain No.	Pitch	Width between inner sidebars	Roller Diameter	Pin	Sidebar		Distance between the top of scraper and the bottom of sidebar	Distance between scrapers	Ultimate Tensile Strength
	P	b_1(min)	D(max)	d	h	t/T	h_1	L	Fu(min)
	mm	mm	mm	mm	mm	mm	mm	mm	kN
FU150	101.6	27	26.5	11.5	35	6	60	130	120
FU200	152.4	36.5	36	15.5	50	8	75	175	240
FU270	152.4	36.5	36	15.5	50	8	100	215	240
FU350	200	55	44.5	19	60	10	145	310	360
FU350H	200	57.6	48.5	22.2	75	10	160	320	480
FU410	200	51.8	41/44.5	19.1	60	10	160	380	360
FU410H	200	57.6	48.5	22.2	75	10	160	380	480
SSN200-U	200	60	60	30	82	12	174	416	700
FU500	300	67.5	63.5	31.75	90	12	200	457	560
FU500H	300	67.4	65	31.75	100	12	235	460	730
FU600	300	75	70	35	100	16	235	560	1000

锻造叉型链
Forging Fork-Shaped Chains

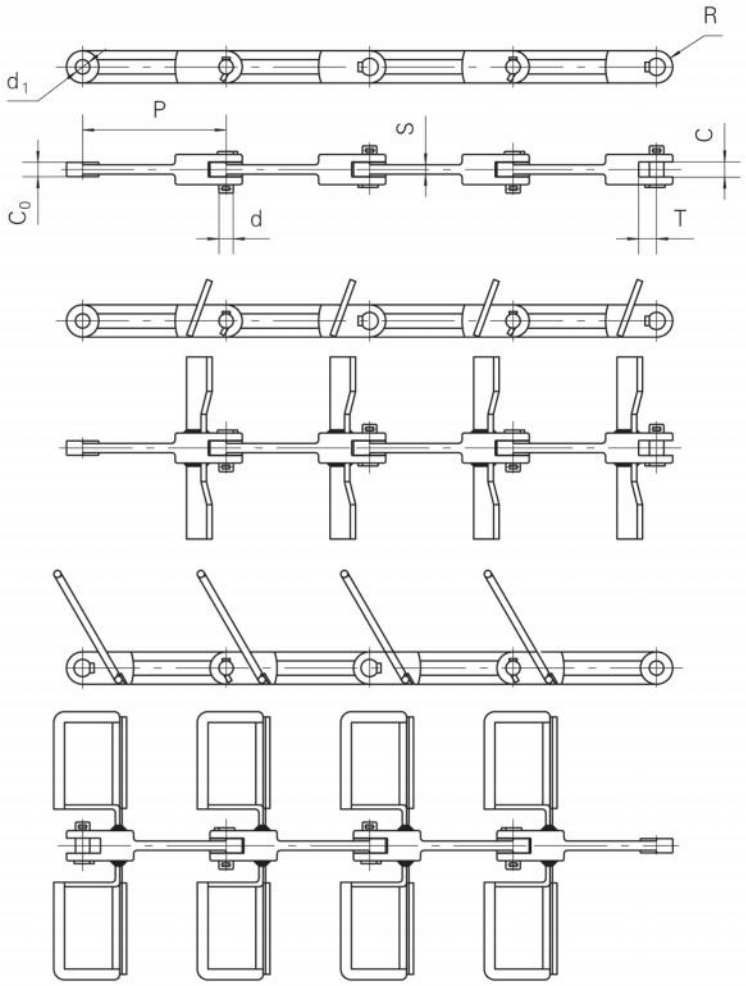

链号	最小抗拉强度	节距						销轴	链杆参数					
Chain No.	Ultimate tensile strength	Pitch P						Pin	Parameters of Link					
	Fu(min)	80	100	125	160	200	250	d	R	S	C	C_0	d_1	T
	kN	mm	mm	mm	mm	mm	mm	mm	mm	mm	mm	mm	mm	mm
MCL56	56	#	#	#				9.92	10	6	12	11	10	12
MCL80	80	#	#	#				11.905	12	7	14	13	12	14
MCL112	112		#	#	#			14.905	15	8	16.5	15	15	17
MCL160	160			#	#	#		17.905	18	10	18.5	17	18	20
MCL224	224				#	#	#	20.89	21	12	22	20	21	23
MCL315	315					#	#	24.89	25	14	26	24	25	27
MCL450	450						#	29.88	30	16	30	28	30	32
MCL630	630						#	35.88	36	20	32	30	36	40
MCL900	900							43.87	45	24	40	38	44	48

刮板链
Scraper Chains

Type A

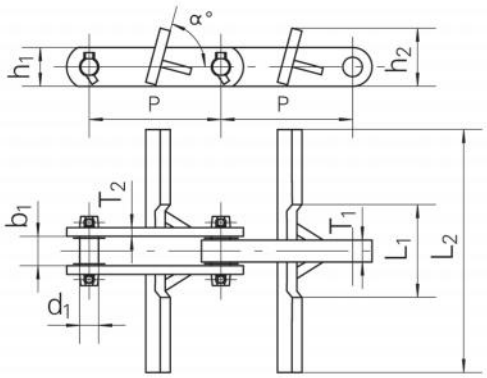

Type B

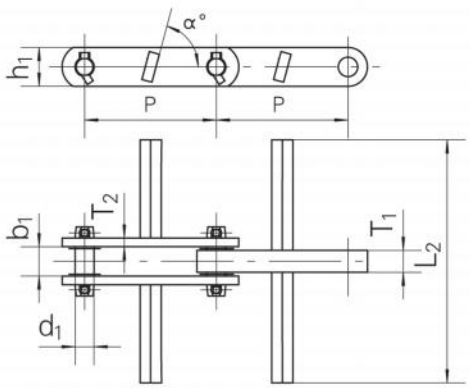

Type C

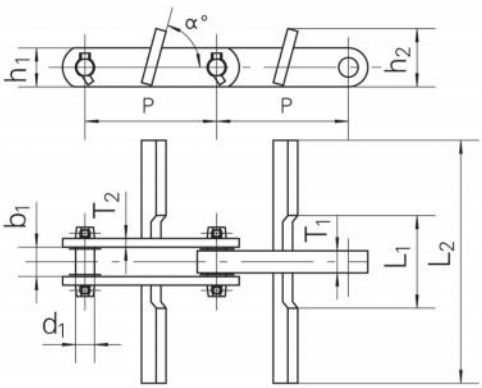

Type D

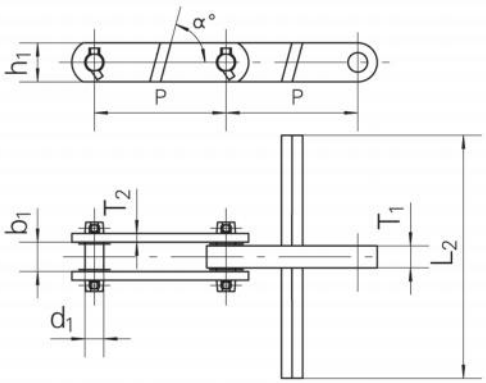

链号	节距	外节内宽	销轴直径	链板		刮板尺寸				最小抗拉强度	每米重量	型号
Chain No.	Pitch	Width between outer sidebars	Pin Diameter	Sidebar		Dimensions of Scraper				Ultimate Tensile Strength	Weight per Meter	Type
	P	b_1(min)	d_1	h_1	T_2/T_1	L_1	L_2	h_2	α	Fu(min)	q	
	mm	mm	mm	mm	mm	mm	mm	mm		kN	kg/m	
GS31F	152.4	32.5	22	45	10 / 25.4	106	280	65.5	75	224.0	20.02	A
GS31FA	152.4	32.5	22	45	10 / 25.4	112	420	80	75	224.0	27.94	A
GS31FB	152.4	32.5	22	45	10 / 25.4	115	320	102	75	224.0	26.71	A
GS43F	152.4	34	22	45	12 / 28	115	400	80.5	90	224.0	32.04	A
HS200	152.4	32.5	22	45	10 / 25.4	–	160	–	75	224.0	13.05	B
HS250	152.4	32.5	22	45	10 / 25.4	106	210	65.5	75	224.0	14.85	C
HS250A	152.4	32.5	22	45	10/25.4	–	210	–	75	224.0	14.26	D
HS310	152.4	32.5	22	45	10 / 25.4	106	270	63	75	224.0	16.34	C
HS310A	152.4	32.5	22	45	10 / 25.4	–	270	–	75	224.0	15.42	D
HS310B	152.4	32.5	22	45	10 / 25.4	–	270	–	75	224.0	15.05	D
SBS4152	152.4	40.8	25.2	50.8	9.5 / 32	–	290	–	90	350	21.18	B
HS450	200	41	35	80	14 / 35	150	400	118.4	75	600.0	43.8	C
HS450A	200	41	35	80	14 / 35	–	400	–	75	600.0	40.12	D

刮板链
Scraper Chains

Type A

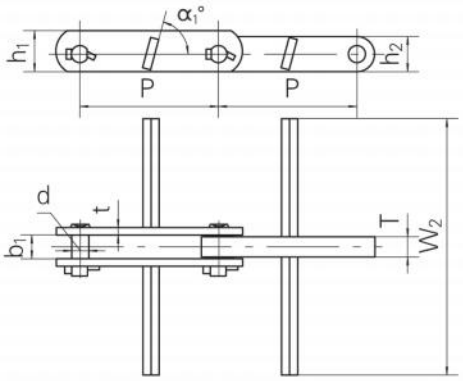

Type B

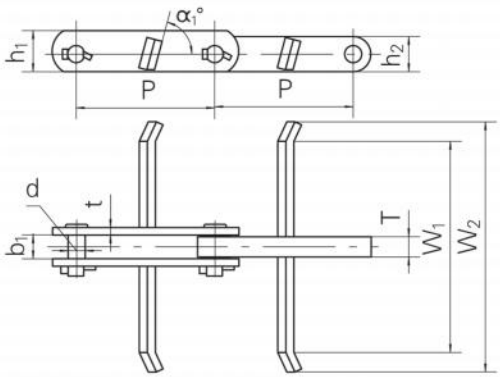

Type C

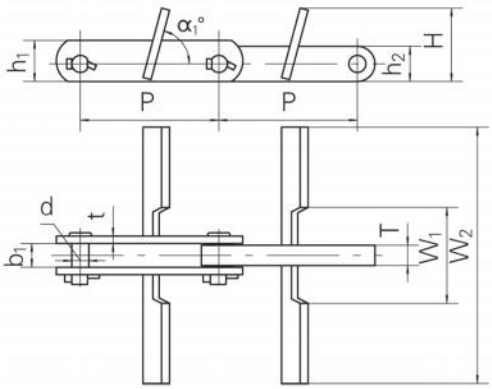

Type D

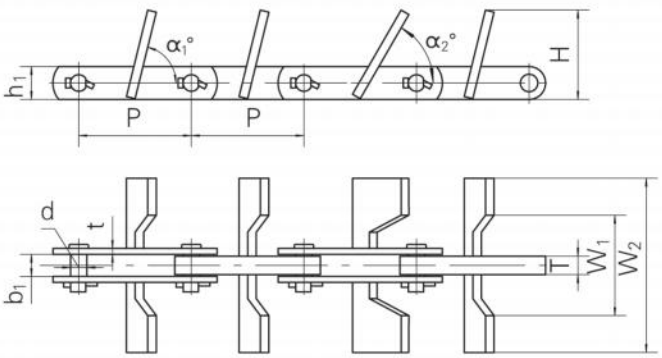

链号	节距	外节内宽	销轴直径	链板			刮板尺寸					最小抗拉强度	每米重量	型号
Chain No.	Pitch	Width between outer sidebars	Pin Diameter	Sidebar			Dimensions of Scraper					Ultimate Tensile Strength	Weight Per Meter	Type
	P	b_1 (min)	d	h_1	h_2	t/T	W_1	W_2	H	α_1	α_2	Fu(min)	q	
	mm	mm	mm	mm	mm	mm	mm	mm	mm			kN	kg/m	
SBS3101	101.6	23.5	18.5	44.5	38.1	8/22	60	135	80	90	–	235.3	12.14	C
HS150	150	26.4	18.5	44.5	38.1	8/22	–	280	–	90	–	315	11.9	A
HS150A	150	23.5	18.5	44.5	38.1	8/22	165	185	–	70	–	235.3	10.21	B
HS150B	150	23.5	18.5	44.5	38.1	8/22	165	185	–	90	–	235.3	9.554	A
HS150C	150	23.5	18.5	44.5	38.1	8/22	165	185	–	90	–	265	9.554	B
HS150E	150	23.5	18.5	44.5	38.1	8/22	265	285	–	90	–	235.3	10.55	B
HS150G	150	24	18.5	44.5	38.1	8/22	165	185	–	70	–	262.5	9.753	B
HS150H	150	24	18.5	44.5	38.1	8/22	–	220	–	70	–	262.5	12.53	A
SBS3152 –236	152.4	30	22.12	44.5	–	8/25	136	236	120	75	60	262.5	21.66	D

模锻刮板链
Drop Forging Scraper Chain

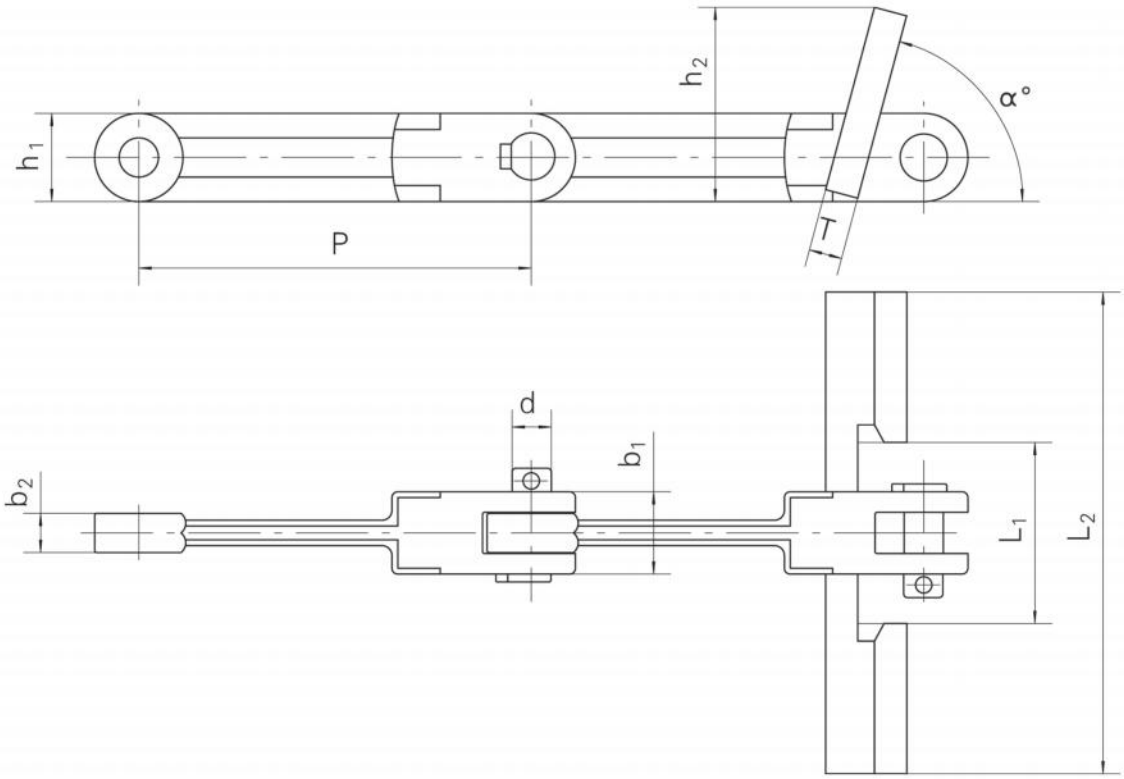

链号	节距	销轴	链板高度	链板厚度		刮板尺寸					最小抗拉强度
Chain No.	Pitch	Pin	Height of Sidebar	Thickness of Sidebar		Dimensions of Scraper					Ultimate Tensile Strength
	P	d_2	h_1	b_1	b_2	L_1	L_2	h_2	α	T	Fu(min)
	mm	mm	mm	mm	mm	mm	mm	mm	mm	mm	kN
YD750	200	25	50	54	22	103	586	80	90	14	390
YD640	142	20	45	42	20	–	605	45	90	12	300
YD640A	142	23	48	42	18	–	300	48	75	14	230.0
YD640C	142	25	50	54	22	80	590	50	90	14	262.4
YD640D	150	25	50	54	22	90	590	82	90	14	262.4
YD200	200	18	40	38	16	–	177	40	75	8	162.0
YD310	200	20	46	44	20	–	280	46	75	12	162.0

模锻刮板链
Drop Forging Scraper Chains

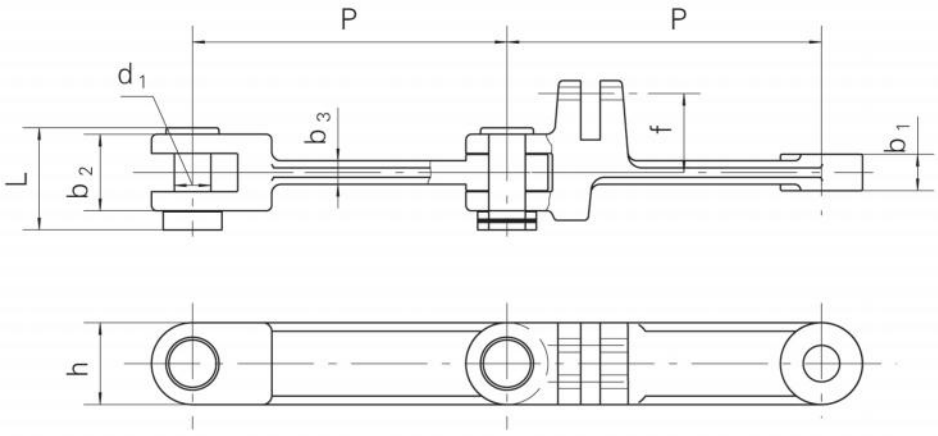

P	d_1 (mm)	b_1 (mm)	b_2 (mm)	b_3(mm)	f (mm)	L (mm)	h (mm)
142	25	19	43	12.2	35	69	50

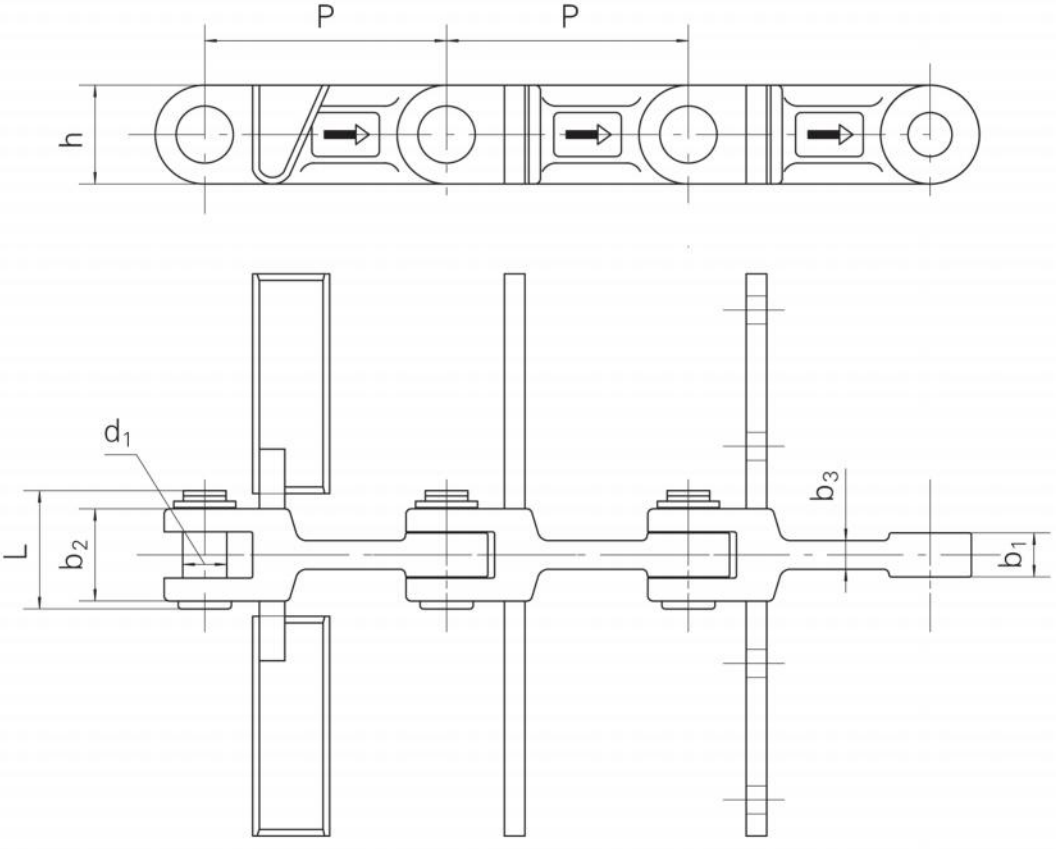

P	d_1 (mm)	b_1 (mm)	b_2 (mm)	b_3(mm)	L (mm)	h (mm)
142	25	29	62	15	82	50

模锻刮板链
Drop Forging Scraper Chain

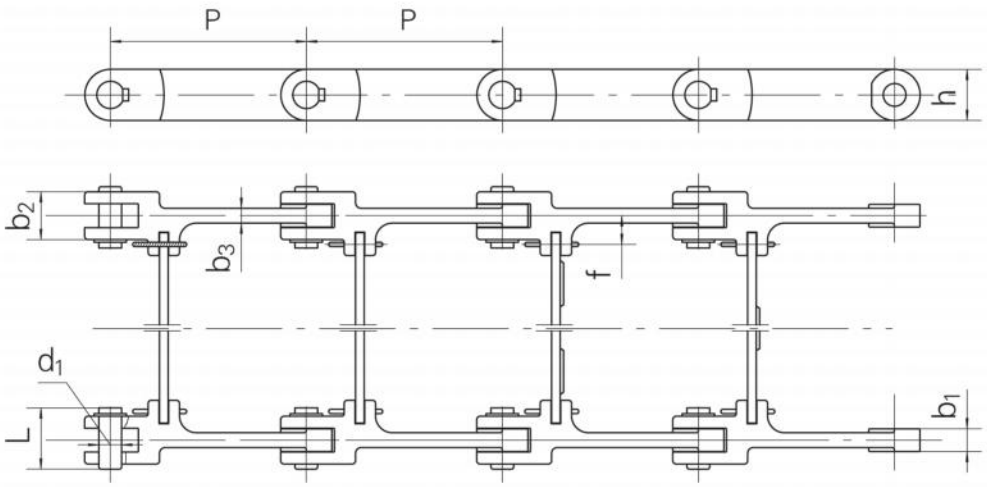

P	d_1 (mm)	h (mm)	b_1 (mm)	b_2 (mm)	b_3 (mm)	f (mm)	L (mm)
200	25	50	24	58	17	38	75

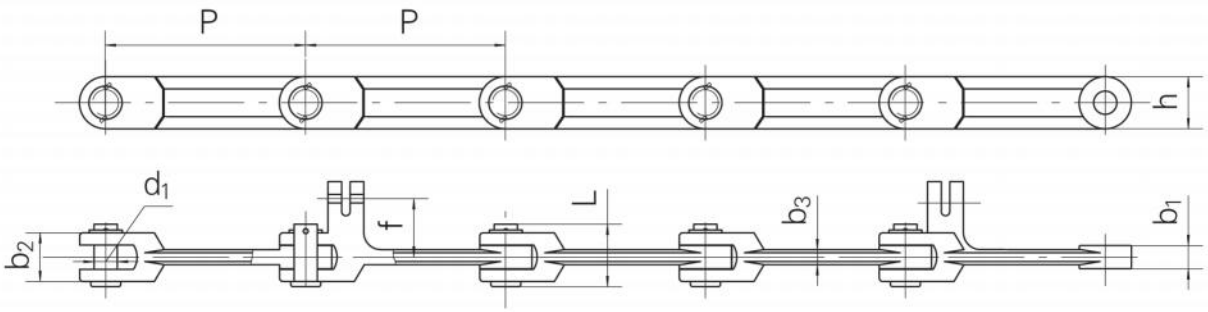

P	d_1 (mm)	h (mm)	b_1 (mm)	b_2 (mm)	b_3 (mm)	f (mm)	L (mm)
200	32	64	23	50	15	66	75

模锻可拆链
Drop Forging Rivetless Chain

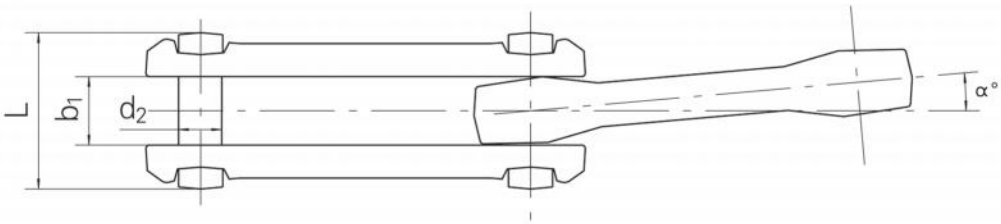

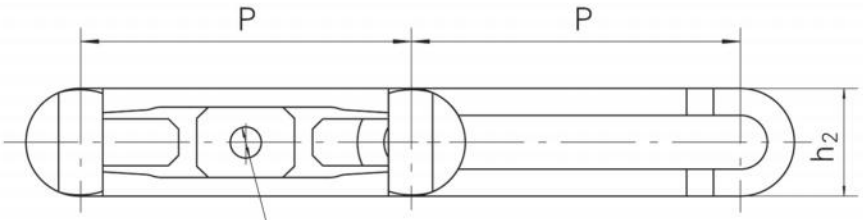

d4（由用户选定尺寸 The dimension is selected by user）

链号		参考节距	销轴直径	销轴长度	标准测量长度	标准测量长度的节距数	侧向转角	链板宽度	最小抗拉强度	每米重量
Chain No.		Referencd Pitch	Diameter of Pin	Length of Pin	Standard Measure Length	Number of Pitches of Standard Measure Length	Lateral Corner	Width of Sidebar	Ultimate Tensile Strength	Weight per Meter
		P	d_2	L	(min/max)		α	h_2	Fu(min)	q
		mm	mm	mm	mm			mm	kN	kg/m
英制系列 Inch Series	X348	76.6	12.7	47	3050.5/3095.2	40	9	27	98	2.7
	X458	102.4	16	58	3063.1/3090.2	30	9	35	187	5.2
	468H	102.4	19.5	84.1	3063.1/3090.2	30	9	47.8	311.7	11.5
	X678	153.2	22.3	77	3055.1/3082.8	20	7	51.6	318	9.5
	698	153.2	28	95.3	3055.1/3082.8	20	7	60	515	17.0
	698H	152.4	39	154	3039.2/3066.6	20	7	72	1078	37.7
公制系列 Metric series	HS100×16	100.0	15.5	77	2991.3/3018.3	30	9	35	187	4.7
	HS100×17	100.0	17	77	2991.3/3018.3	30	9	35	187	4.0
	HS160×24	160.0	23.5	96	3190.7/3219.5	20	7	51.6	318	10.3

套筒链
Bushed Chains

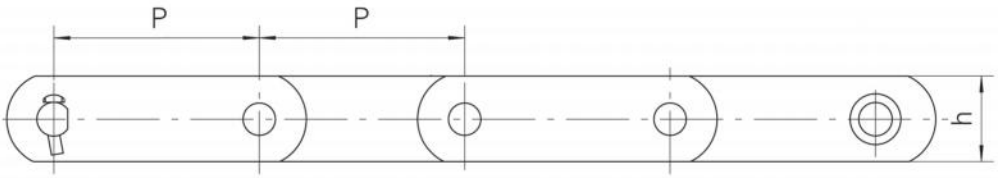

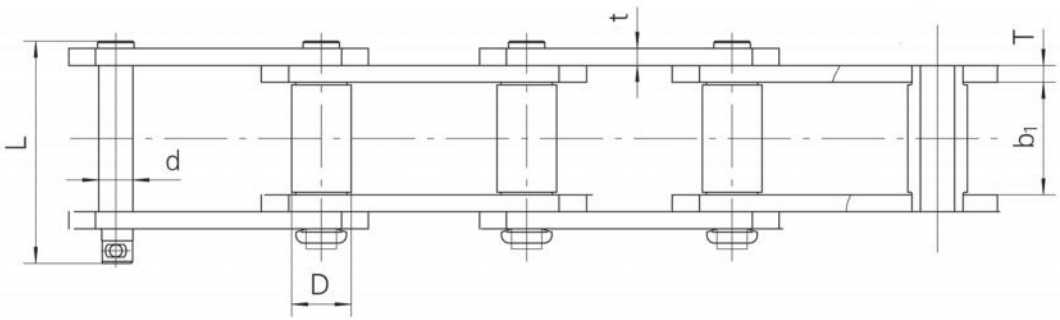

链号	节距	内节内宽	套筒外径	销轴		链板		最小抗拉强度	每米重量
Chain No.	Pitch	Width between inner sidebars	Bush Diameter	Pin		Sidebar		Ultimate Tensile Strength	Weight per Meter
	P	b_1(min)	D (max)	d	L	h	t/T	Fu(min)	q
	mm	mm	mm	mm	mm	mm	mm	kN	kg/m
HS856	152.4	76.2	44.45	25.4	152.2	63.5	12.7	364.5	24.57
HS956	152.4	74.9	44.45	25.4	152.2	76.2	12.7	431.2	24.72
HS857	152.4	76.2	44.45	25.4	152.2	82.6	12.7	431.2	31.27
HS958	152.4	76.2	50.8	28.7	154.2	82.6	14.3	431.2	31.27
HS859	152.4	95.2	60.45	31.75	193.5	101.6	16	689	50.63
HS150	153.67	84.8	44.45	25.4	161.5	63.5	12.7	377.8	24.72
HS864	177.8	95.25	60.45	31.75	193.5	101.6	16	689	49.14
HS984	177.8	92.25	63.5	35.1	186.7	101.6	15.7	689	49.14

套筒链附件
Attachments of Bushed Chains

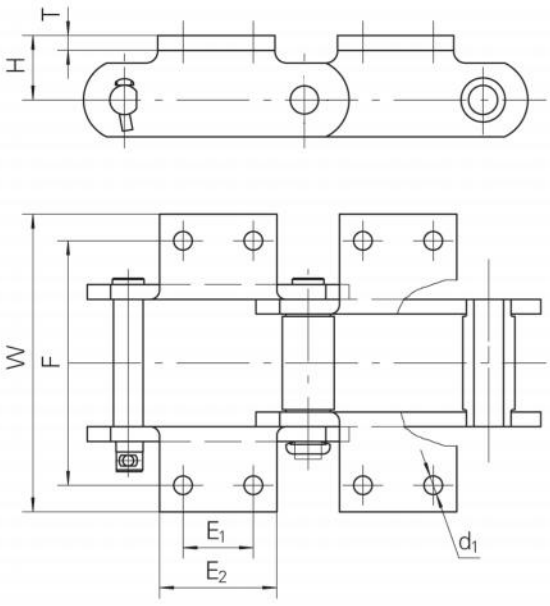

K24

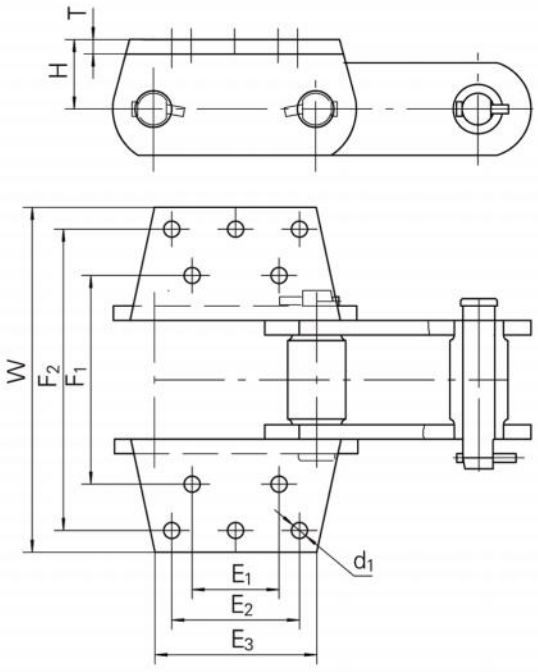

K443

K24 附件 K24 Attachment								
链号	E_1	E_2	F	W	d_1	H	T	每米重量 Weight per meter
Chain No.	mm	mm	mm	mm	mm	mm	mm	q(kg/m)
HS856	63.5	175.5	184.2	238.3	17.5	47.75	12.7	40.95
HS956	63.5	175.5	184.2	241.3	17.5	47.75	12.7	43.18

K443 附件 K443 Attachment										
链号	E_1	E_2	E_3	F_1	F_2	W	d_1	H	T	每米重量 Weight per meter
Chain No.	mm	mm	mm	mm	mm	mm	mm	mm	mm	q（kg/m）
HS864	95.25	139.7	177.8	228.6	330.2	381	17.5	76.2	16	81.9
HS984	95.25	139.7	185	228.6	330.2	378	17.5	76.2	15.9	71

套筒链附件
Attachments of Bushed Chains

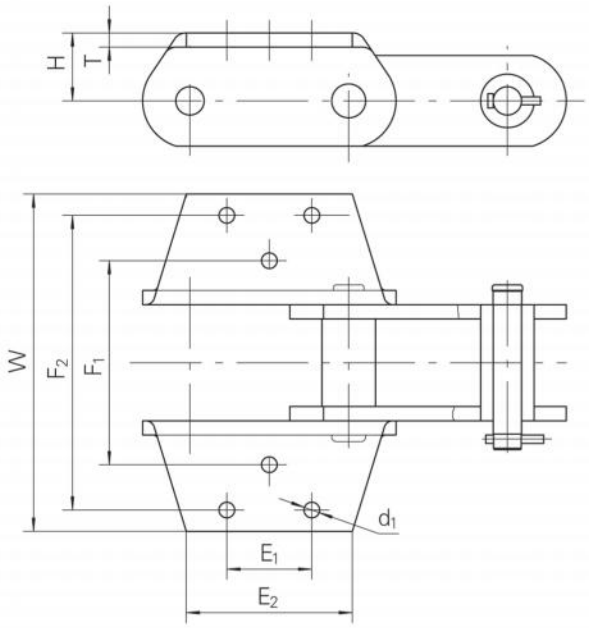

K35

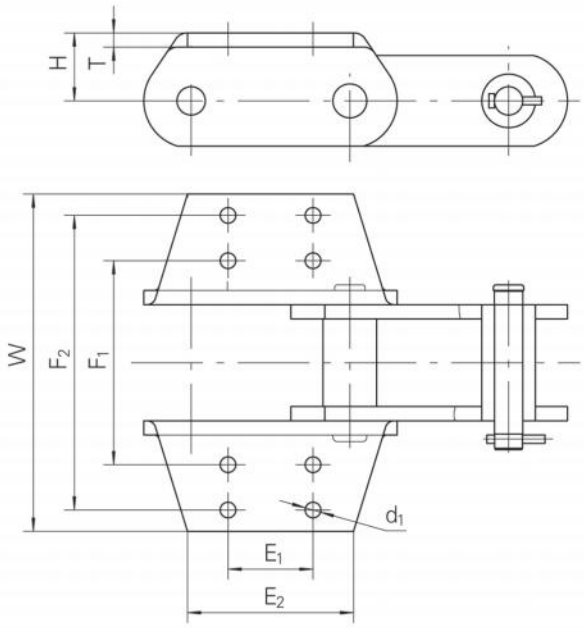

K44

K35 附件 K35 Attachment									
链号	E_1	E_2	F_1	F_2	W	d_1	H	T	每米重量 Weight per meter
Chain No.	mm	mm	mm	mm	mm	mm	mm	mm	q (kg/m)
HS856	63.5	148.3	184.2	298.5	344.4	17.5	47.8	12.7	40.06

K44 附件 K44 Attachment									
链号	E_1	E_2	F_1	F_2	W	d_1	H	T	每米重量 Weight per Meter
Chain No.	mm	mm	mm	mm	mm	mm	mm	mm	q (kg/m)
HS857	88.9	139.7	177.8	304.8	355.6	14.3	63.5	12.7	56.59
HS859	69.85	150.4	228.6	330.2	381	17.5	76.2	16	87.86
HS958	88.9	146.1	177.8	304.8	347.5	14.3	63.5	12.7	59.56

弯板套筒链
Crank-Link Bushed Chains

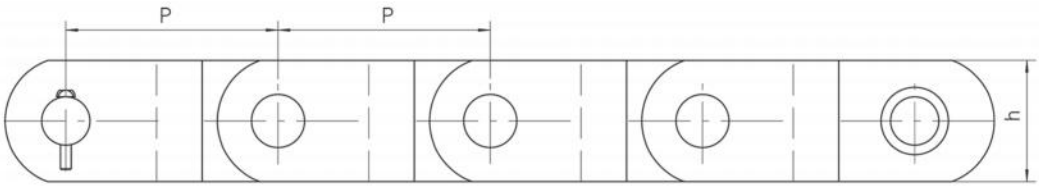

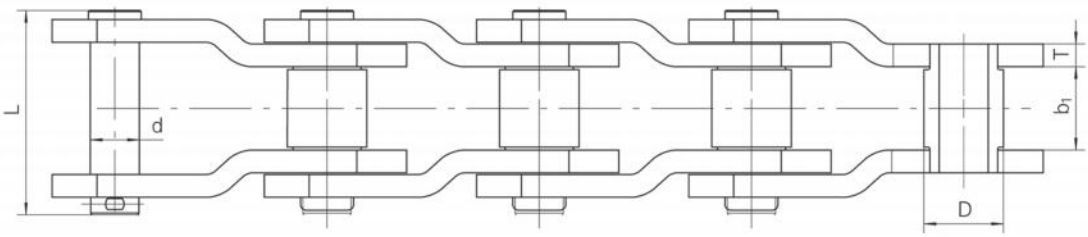

链号	节距	窄端内宽	套筒外径	销轴		链板		最小抗强度拉	每米重量
Chain No.	Pitch	Inner Width at the narrow end	Bush Diameter	Pin		Sidebar		Ultimate Tensile Strength	Weight per Meter
	P	b_1(min)	D	d	L	h	T	Fu(min)	q
	mm	mm	mm	mm	mm	mm	mm	kN	kg/m
HS850	152.4	57.15	50.8	33.27	157	82.6	16	634.7	36.6
HS886	177.8	68.33	66.68	41.07	172.16	101.6	19.05	1300	60.2
HS6066	152.4	75.8	76.2	44.45	184	120.7	19.05	1778	81.3